R60 FM Broadcast and Aviation Band

PLL Receiver Kit

Assemble Manual V4.0

Overview

This receiver kit is designed to receive FM broadcast and radio communications between aircraft and towers. With a good antenna (e.g. a multi-element VHF Yagi antenna), it can receive calls between various types of aircraft and towers up to 150 km away in unobstructed areas.

The hardware described in this article is V4.0 and the main PCB labelled “HM00ABRD_4”.

Specifications

Tuning Range : Dual band(87-108MHz，118-136 MHz)

Mode : FM /AM

Supply Voltage : 12V (It is recommended to use linear regulated power supply or battery)

Current: FM mode 120mA，AM mode 160mA

Speaker: 8 ohm 250mW

Circuit Description

Refer to the circuit diagram shown on the last page of this document.

The signal received by the antenna passes first through a bandpass filter (BPF) and send the signal into TA7358. The BPF provides full coverage of the 88-108MHz band and the 118-136MHz band. It ensures that only signals in this band are amplified by a LNA in TA7358 while other signals above and below this band are rejected.

The filtered and amplified signal then passes into the first mixer (also in TA7358). The TA2003 mixes this with the local oscillator signal provided by the PLL. The frequency of the local PLL oscillator is 10.7MHz higher than the external signal.

The TA7358 mixer outputs the sum and difference frequencies to the 10.7MHz ceramic filter. Its function is to filter out the unwanted signals generated by the mixer. The difference frequency equals the first intermediate frequency (IF) signal of 10.7MHz. The sum of the frequencies is rejected by the filter. The filtered signal is then sent to the second mixer in the TA78132 for conversion to the second IF of 455kHz using the 10.245MHz pll signal from mcu board for this mixer. This signal is then sent to the TA7640 for further amplification and amplitude modulation detection. When in FM mode, the first IF signal (10.7MHz) is directed sent to the FM DET(in TA7640) .

The resulting audio signal is passed to FM62429 which controls the audio volume. The output voice signal is then amplified by LM386 and sent to the speaker/headphones.

Component Selection

All capacitors less than 1000pF are high-frequency ceramics, capacitors greater than 1uF are aluminum electrolytic capacitors, and all resistors are 1/4W 5% fixed resistors.

Soldering Reminder

1 First weld the two 5-PIN connection pins on the OLED back board,

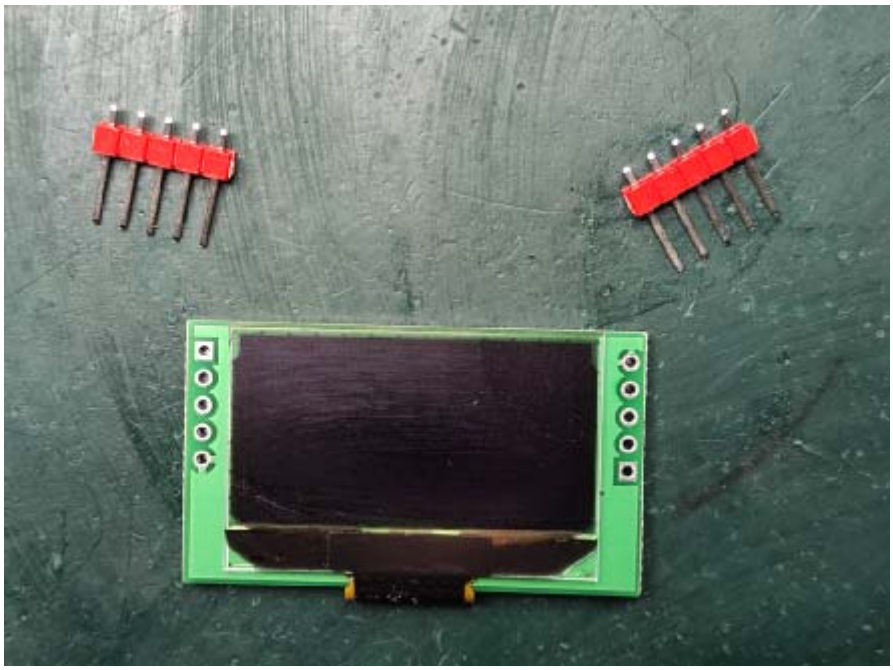

2 Welding the keyboard board

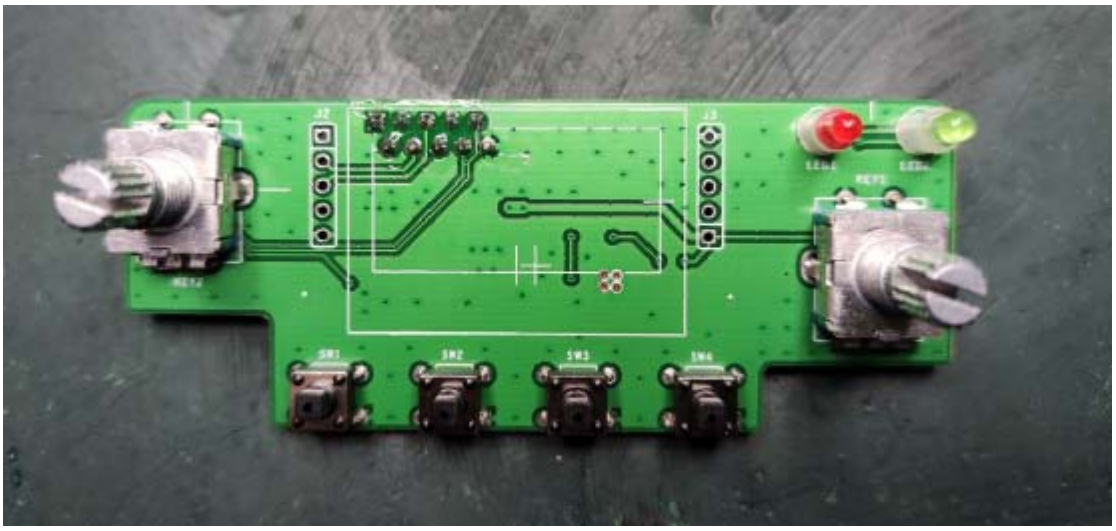

2 Do not weld the OLED display board with the keyboard board! After assembling everything together, tighten the encoder nuts on both sides.

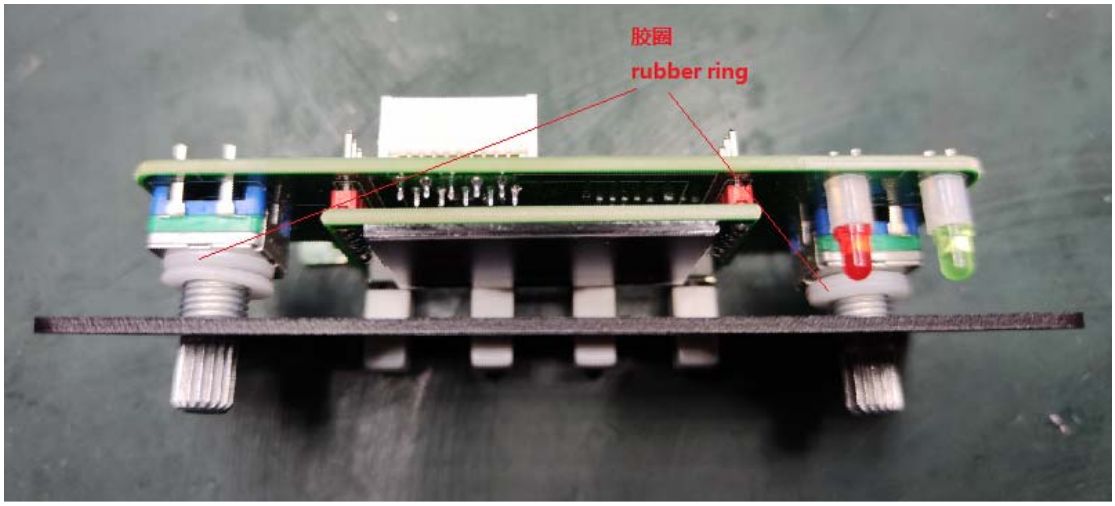

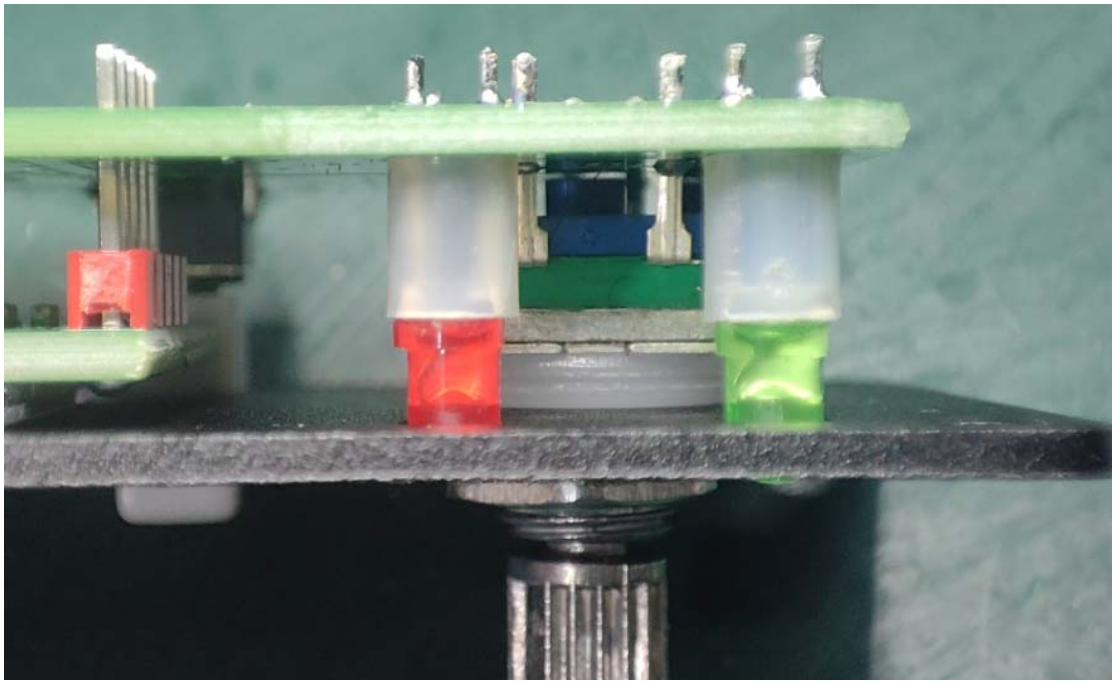

After the OLED backp board is closely fitted to the front panel, solder the needles on the OLED display board

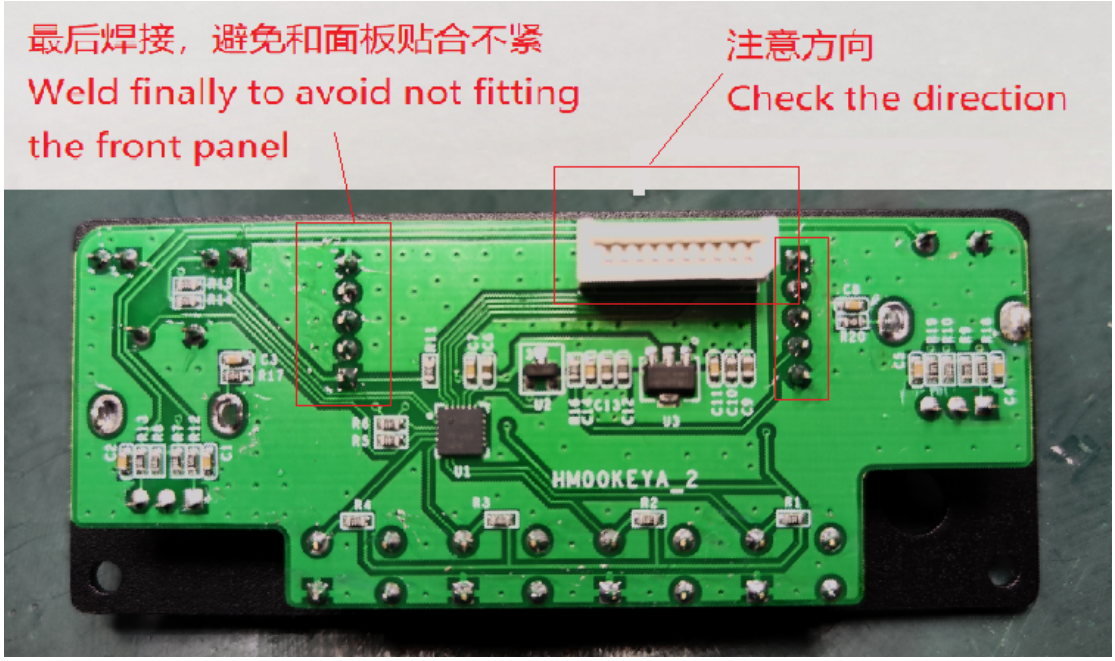

Rear panel assembly

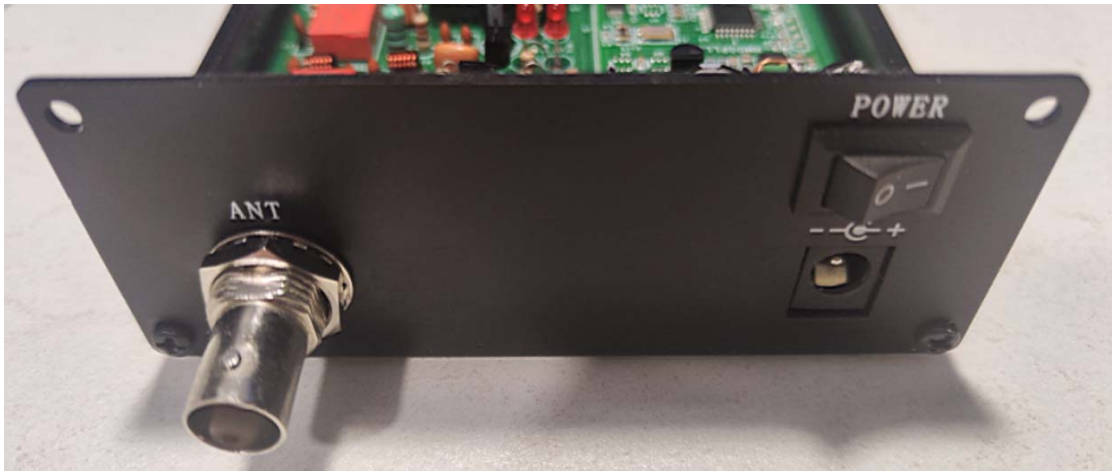

Speaker assembly

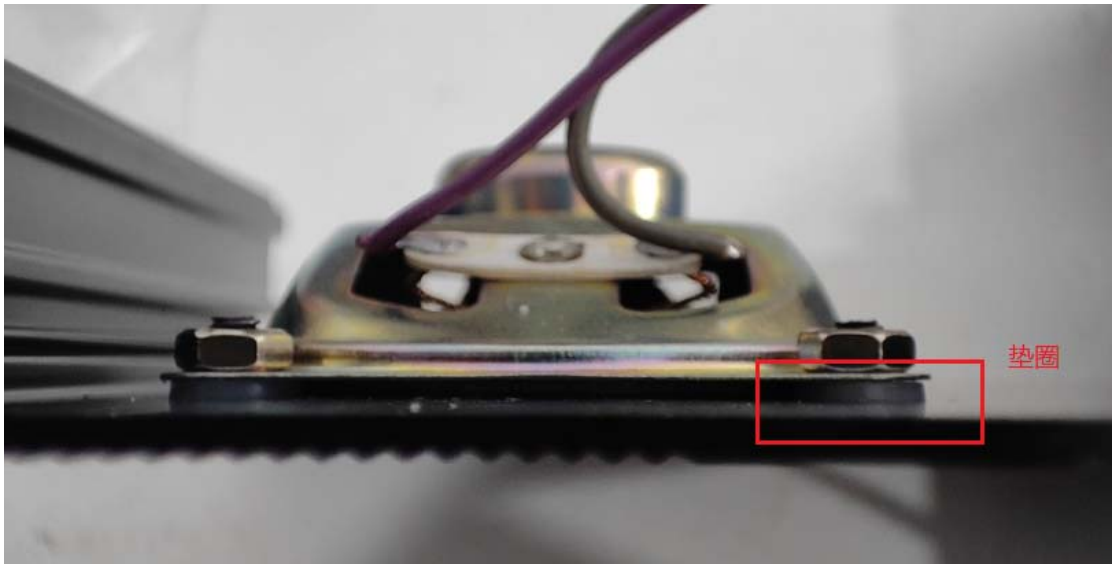

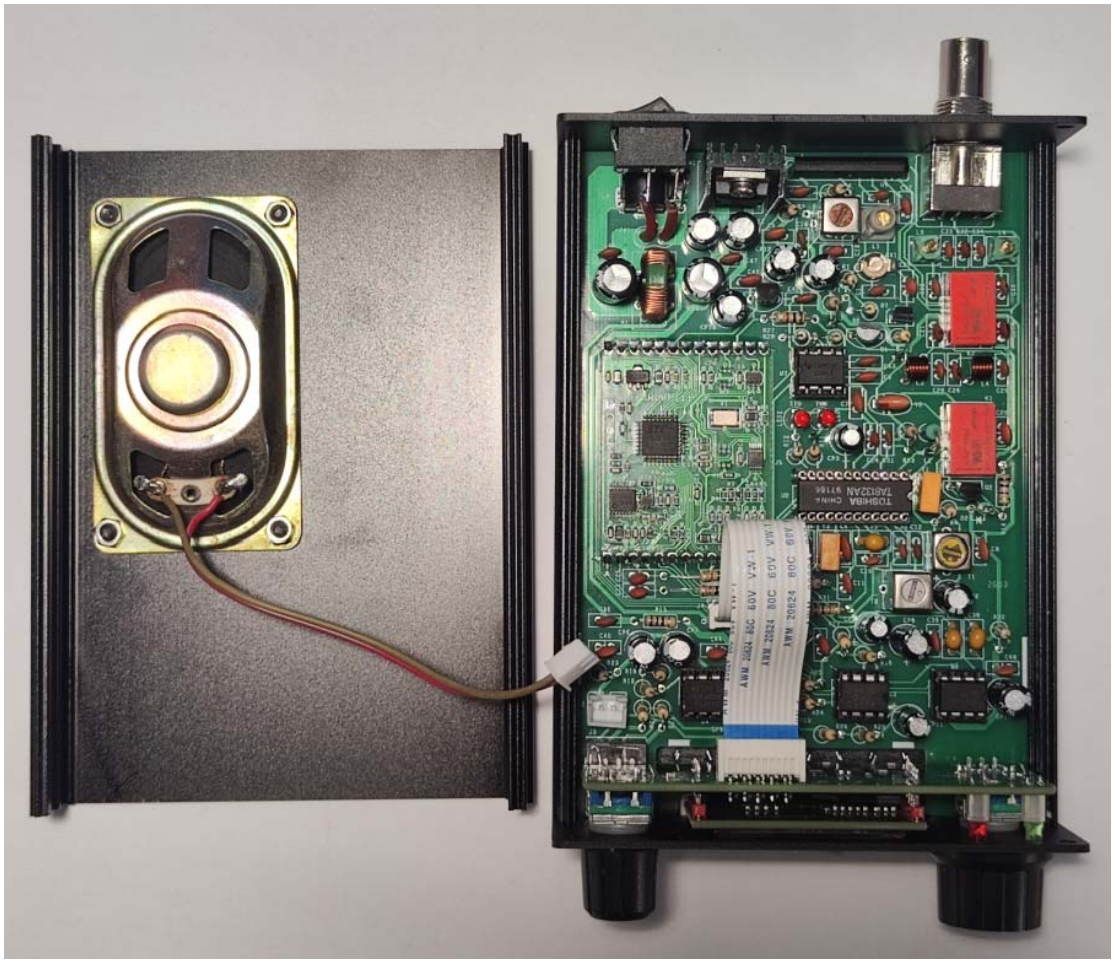

The connection between the front panel and the mother board, pay attention to the direction of the FPC connector, do not install the reverse!

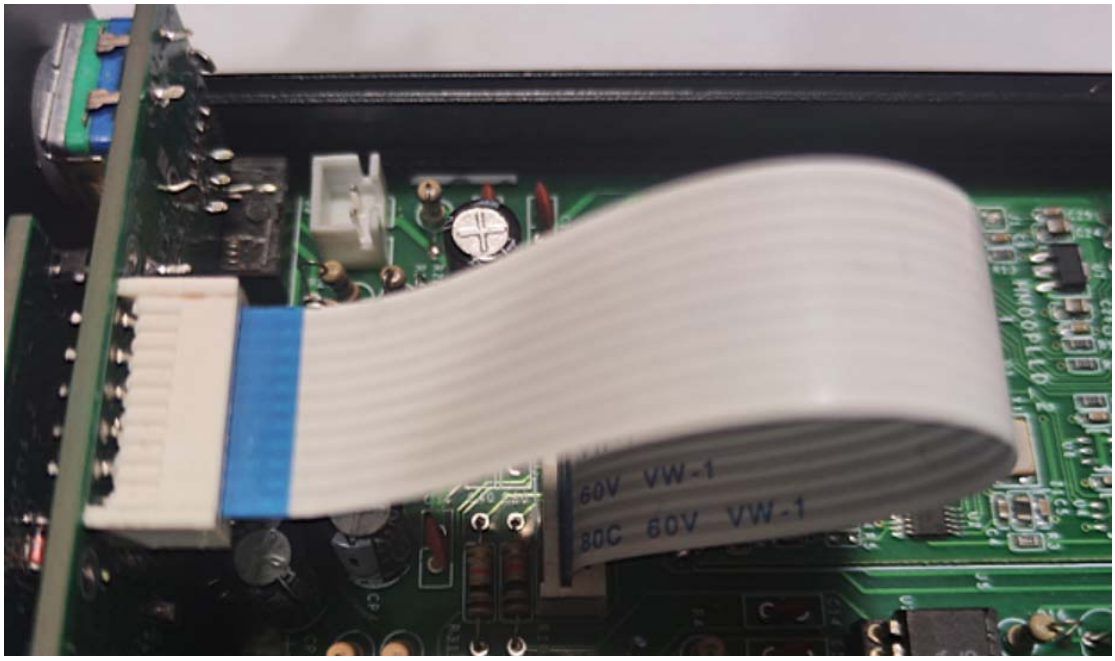

Assembly and Adjustment

Test all transistors, resistors, and capacitors with a multimeter before installing all components, then install all components according to the circuit diagram and the markings on the PCB.

Generally, fit the components in the order of lowest to highest height above the PCB. At the same time, install sockets for the integrated circuits. This avoids the need to solder the main integrated circuits.

Check your work carefully. If your assembly is correct, connect the power supply. IMPORTANT: Make sure the positive and negative polarity of the power supply is correct.

Plug a pair of Walkman-type earphones into the earphone socket. You should hear white noise.

Now, connect a piece of insulated stranded copper wire about 60 cm long to the antenna socket. You should hear the noise increase significantly. This means that the receiver is basically operating correctly.

If you do not have a suitable signal generator for this band, it is recommended to adjust the L5、L6 copper core to rotate out quickly, like the photo is below. CX1 and L1 should be rotated to the position shown in the following picture.

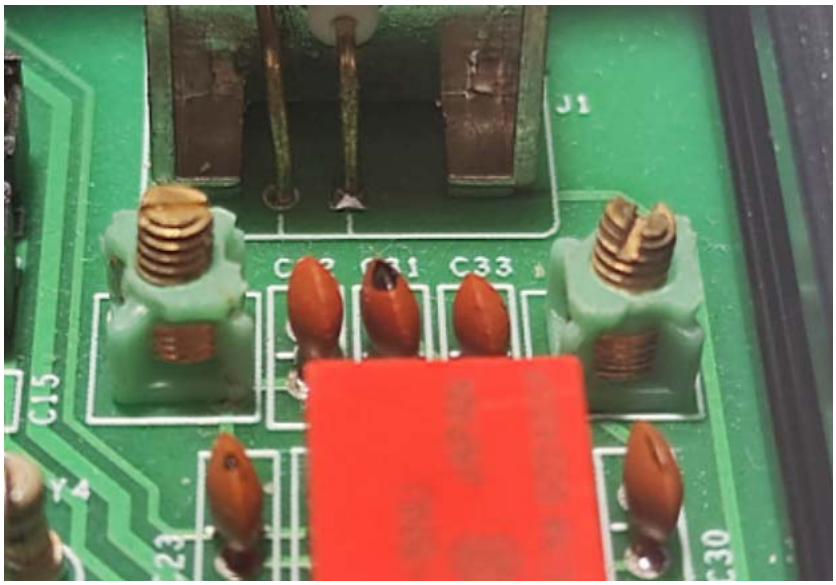

Now you can set the receiver in FM mode, Adjust red IF transformer for the best sound . Then short press the knob to select the receiving aviation band, and then adjust the yellow IF transformer to maximum sound.

Panel functions are below。

The power plug and connection details for this receiver are as follows:

电源插头：内正外负

Usage method

VHF communications are carried out along paths that are close to a straight line. If there is a very large signal from a nearby tower present in the VHF band, any other smaller VHF communications signal you wish to hear from an aircraft can be blocked. You need to pay attention to this when listening to the tower signal. It is better to listen to the signal of the aircraft as they arrive and depart from an airport.

Because the height of the aircraft close to the airport can be anywhere from several hundred metres to several kilometers in altitude, the signal can cover a long distance. At the same time, for better results, it is recommended to use an external high antenna, such as a 1/4 wavelength (about 60 cm) ground plane (GP) antenna, or better still, use a VHF multi-element Yagi antenna. In short, you need a suitable antenna to match the actual environment to achieve good results!

The specific antenna installation reference is as follows:

For beginners, it is recommended to use the GP antenna or Yagi antenna. These two antennas are relatively simple and readily homemade. The diagram below shows the GP antenna comprising several metal elements, an RF socket and plug (typically a PL259 plug on the coaxial cable running to the receiver and a matching SO239 socket).

A GP antenna is the abbreviation for ground plane antenna. This kind of antenna is also called vertically polarised grounded quarter-wavelength antenna. It is a commonly used vertically polarized omnidirectional antenna. It consists of a vertical radiating element and 3-4 horizontal or downward slanted antenna elements. The GP antenna has a simple structure and is easy to set up. It does not need a rotator. It is generally used as a fixed radio antenna and it is simple to make.

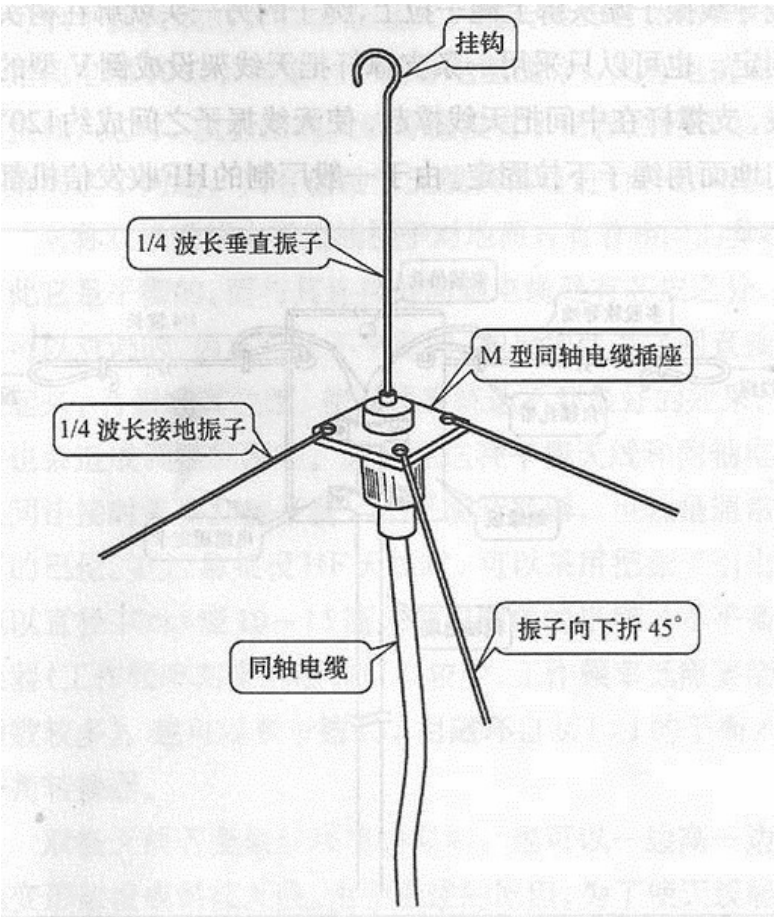

The picture below shows the Yagi antenna. This antenna has good directivity and high gain.

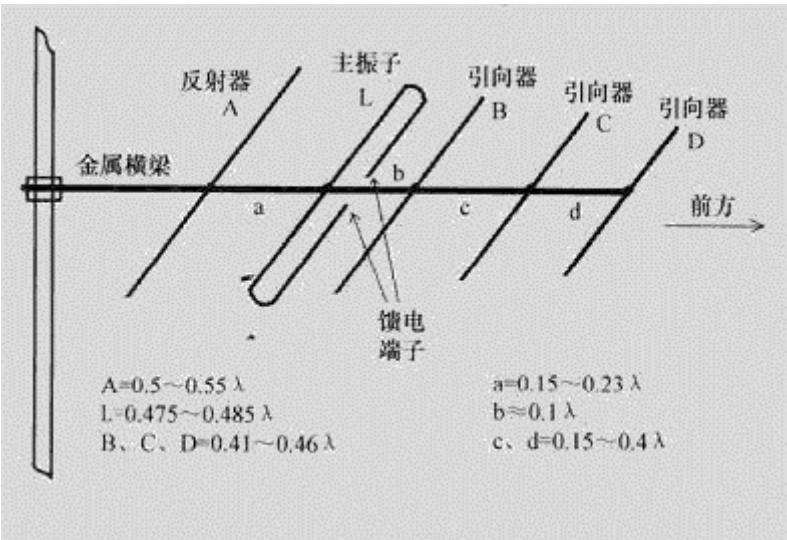

The metal mast should be at the rear of the Yagi antenna. This ensures the mast will not have a significant impact on the antenna radiation field. In the diagram, λ is the wavelength. The antenna can be assembled after calculating the length of the director, the reflector and the other antenna elements, and the spacing a, b, c, and d.

Instructions for use

After normal power-on, the OLED screen displays normally, and the encoder is in frequency adjustment mode by default. At this time, press the STEP key, and you can see that the triangle below the number will keep moving, representing that the step is constantly changing.

By default, the volume adjustment mode is used during power-on. Press the VOL/SQL button to switch VOL setting mode or SQL setting mode. In the VOL setting, the speaker symbol is shown in the following figure. In the SQL setting, the speaker letter is shown in the following figure. Respectively represent the current encoder knob mode.

VOL setting mode

SQL setup mode

Press the MENU key and the display will switch to the CH menu, > representing the currently selected item,adjusting the encoder will change the selection.

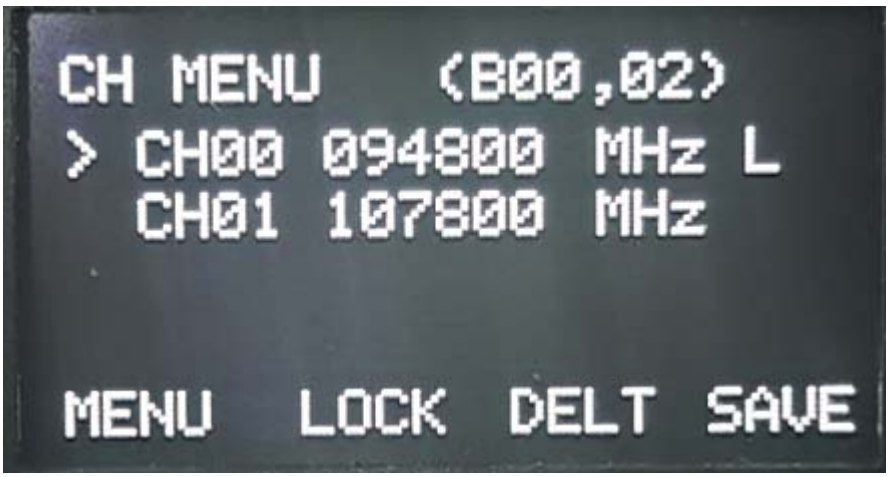

Under the CH menu, there are two CH items by default, and the four keys are:

MENU press once to switch to the next menu

LOCK Lock key, press this key, the currently selected CH entry will be locked, will not be deleted. Pressing it again will cancel the lock.

DELT Delete key. If the selected entry is not locked, press this key to delete the current CH

entry. The CH table has at least one entry and cannot be completely empty.

SAVE saves the current CH table and still exists after power failure.

Under this menu, press the encoder button, all unlocked CH entries will be deleted, and the automatic search function will be activated, and the CH table will be automatically filled after the search is completed.

Pressing the MENU key will bring you to the Configuration menu, > represents the currently selected item, selecting Encoder will change the selection. Currently there are 0-5 items.

There are 3 buttons under this menu,

MENU press once to switch to the next menu

EDIT press once to edit the selected item (the encoder rotates to modify the operation), and press again to end the editing

SAVE Saves the parameter Settings

This interface is used for experienced personnel with instruments to perform operations.

0 XTAL Frequency. The default frequency is 250068, which indicates 250068 x 100Hz. Can be modified according to the actual measurement.

1 IF frequency. The default value is 107000, which indicates 107000 x 100Hz.

2 The default value is 102450, which indicates 102450 x 100Hz.

3 Band 0 (FM broadcast), the signal strength threshold is 3000 by default, which means that the automatic search station is valid when the AD sampling exceeds 3000.

4 Band 1 (Aviation band), the signal strength threshold, the default 3000, which means that the automatic search station is valid when the AD sampling exceeds 3000.

5 Restore to Factory Settings.

Press the MENU key to enter the information menu.

Press the SET key again to exit the initial menu.。

Attention:

Under the initial menu, long press the MENU key for more than 3 seconds to switch between VFO mode and MEM mode.

In VFO mode, if you need to save a frequency and hold down the STEP key for more than 3 seconds, the current frequency key is written into the CH table.

Under the initial menu, the machine will automatically write the current set band, mode, frequency, volume, and squelch into the internal EEPROM, which will be used directly when the next power on.

Parts List

Main board

1/4W 5% Resistors		
R1,R3,R4,R32	100	
R2,R6	100K	
R5,R8	22K	
R7,R13	330	
R9,R10,R28,R29,R30,R31	10K	
R11,R12,R14,R16,R18,R19, R25,R27	1K	
R15,R23	10	
R17,R21,R22,R26	4.7K	
R20,R24	47	
Beads, inductors, transformers		
L1	MD0709A-3.5T	
L2	100uH	
L3,L4	0.7mm-5.5T	
L5,L6	5x5-4.5T	

T1	7X7-455KHz	
T2	7X7-10.7MHz-C （Pink）	
T3	7X7-10.7MHz-B （Red）	
B1	T120604 Common-mode coil	
Chip capacitance		
C1,C2,C14,C16,C17,C18,C23,C25,C44,C45	0.01uF(103)	
C3,C13,C28,C29,C33,C34	15p	
C4,C5,C7,C8,C9,C11,C20,C35,C36,C39,C40,C41,C42,C43,C46,C47,C48	0.1uF(104)	
C6	0.068uF	
C10	390pF	
C12,C24	0.022uF	
C19,C31	100pF	
C21,C27	12pF	
C22,C30	8.2pF	

C26	3.9pF	
C32	2.7pF	
Monolithic capacitor		
C15,C37,C38	3.3uF	
Electrolytic capacitor		
CP1,CP7,CP8	100uF /25V	
CP2,CP4,CP6,CP9,CP10,CP14,CP15,CP16	220uF /25V	
CP3,CP5,CP11	10uF/25V	
CP12,CP13	470uF/25V	
Adjustable capacitance		
CX1	5/20pF	
Transistor		
D1	BB910	
D2	1N4148	
D3	P6KE16A	
Q1	2N2222	TO92
Q2	8050	TO92
LED1,LED2	3mm LED	
IC		
U1	TA7358	
U2	TA8132 （DIP24）	Have IC socket
U3	4558 （DIP8）	Have IC socket
U4	TDA7231 （DIP8）	Have IC socket
U5	FM62429（DIP8）	Have IC socket
U6	78L09（TO92）	

U7	LM358 （DIP8）	Have IC socket
U8	7805（TO220）	
Crystals and filters		
Y1	455KHz Ceramic filter	
Y2	10.7MHz Ceramic filter	
Y3	456KHz Ceramic oscillator	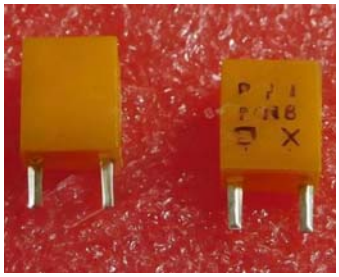
Other components		
J1	BNC	
J2	Speaker socket	SPK
J3	3.5mm stereo socket	PHN（Stereo output）
J4	FPC socket	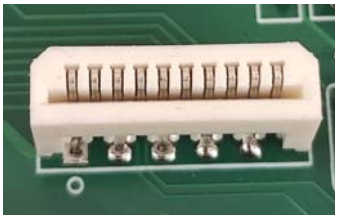
J6	Power socket	5.5/2.1
PS1	Power wiring	
K1,K2	relay	EA2-5V
Blank PCB board×1pcs		

Heat sink ×1、M3 screw ×1

PCB Assembly Drawing

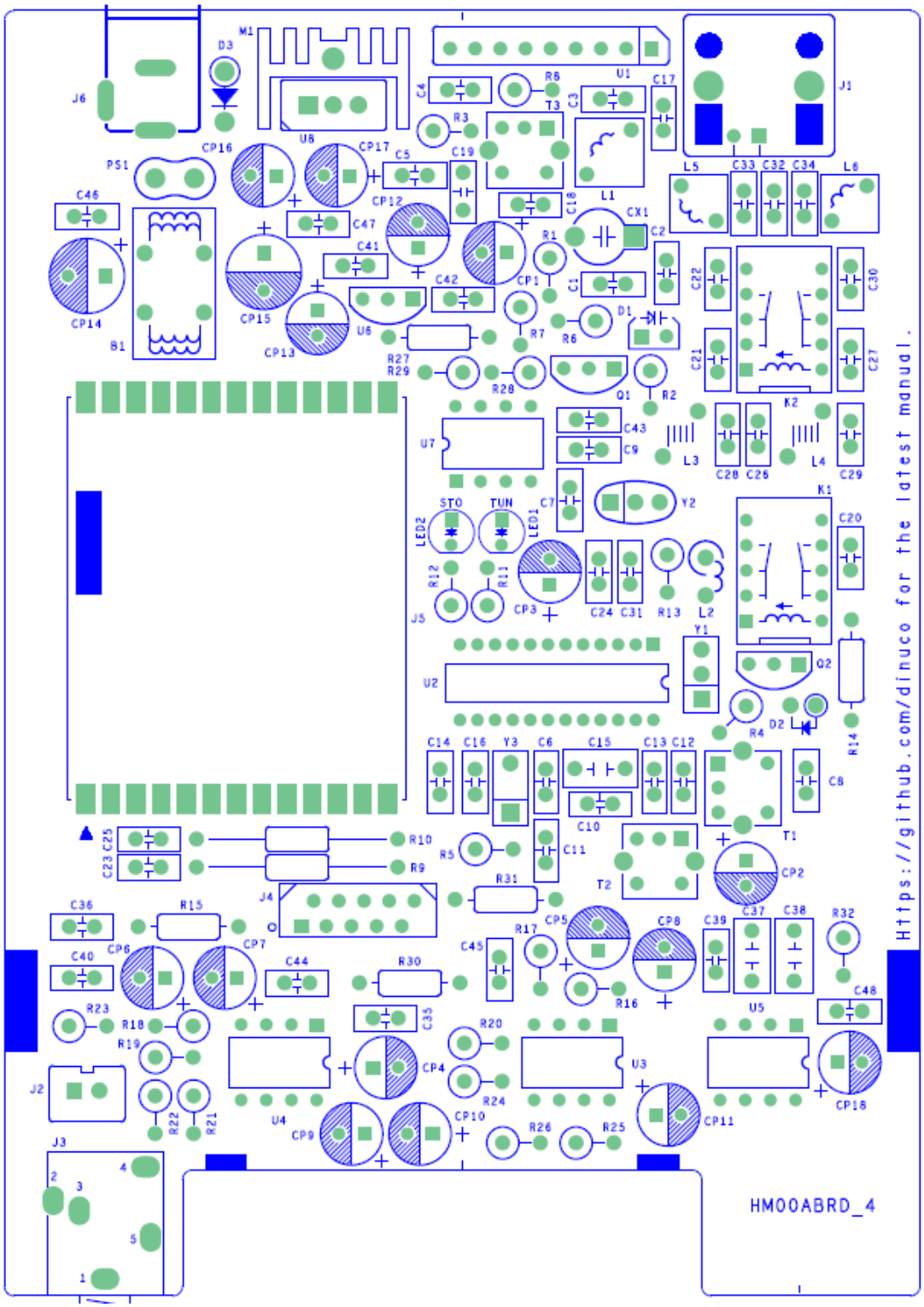

Resistor Color Codes and Ceramic Capacitor Identification

Resistors are marked using colored bands. Most resistors are 5% accuracy parts and marked with four bands. Less common 1% accuracy resistors are marked with 5 color rings. The following table can be used to read the value of these resistors:

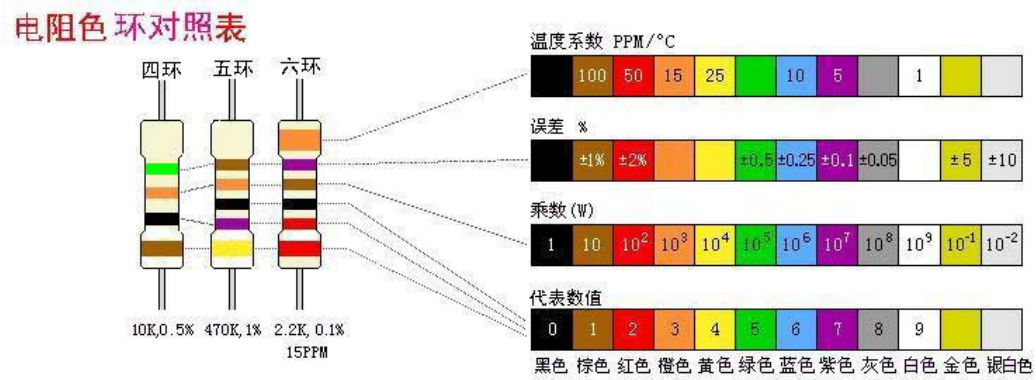

The capacitance of ceramic capacitors is generally denoted in units of pF (p meaning pico or 10^-12). However, some parts are directly labeled, such as 1000p, 220p, etc.

Most are labelled in exponential terms, such as 102,221. The first two digits are two most significant digits of the capacitor's value, the last digit being the number of zeros added after these digits. For example, "102" means that the leading digits are 10, while 2 means that 2 more zeros are added, i.e. 1000pF. Similarly, "221" means that the leading digits are 22, and 1 means that one further zero is added, i.e. 220pF.

62 here means 62pF

102 here means 1000pF

Polarity of Electrolytic Capacitors

Electrolytic capacitors are polarised. Please make sure that the positive and negative pins of these capacitors correspond correctly to the PCB markings when inserting these parts.

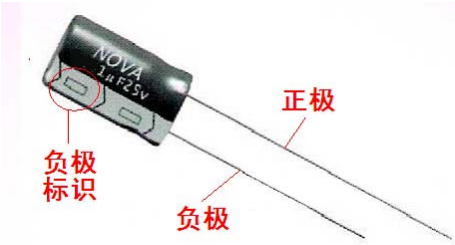

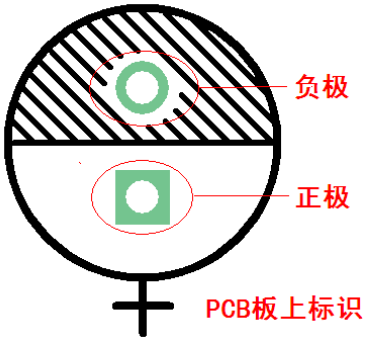

IC Identification

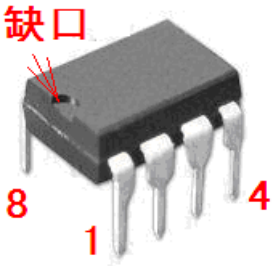

8 脚直插管脚排列

Identification of Transistors and Diodes

TO-92 package pin arrangement 1N4148 diode polarity 1N4001 diode polarity

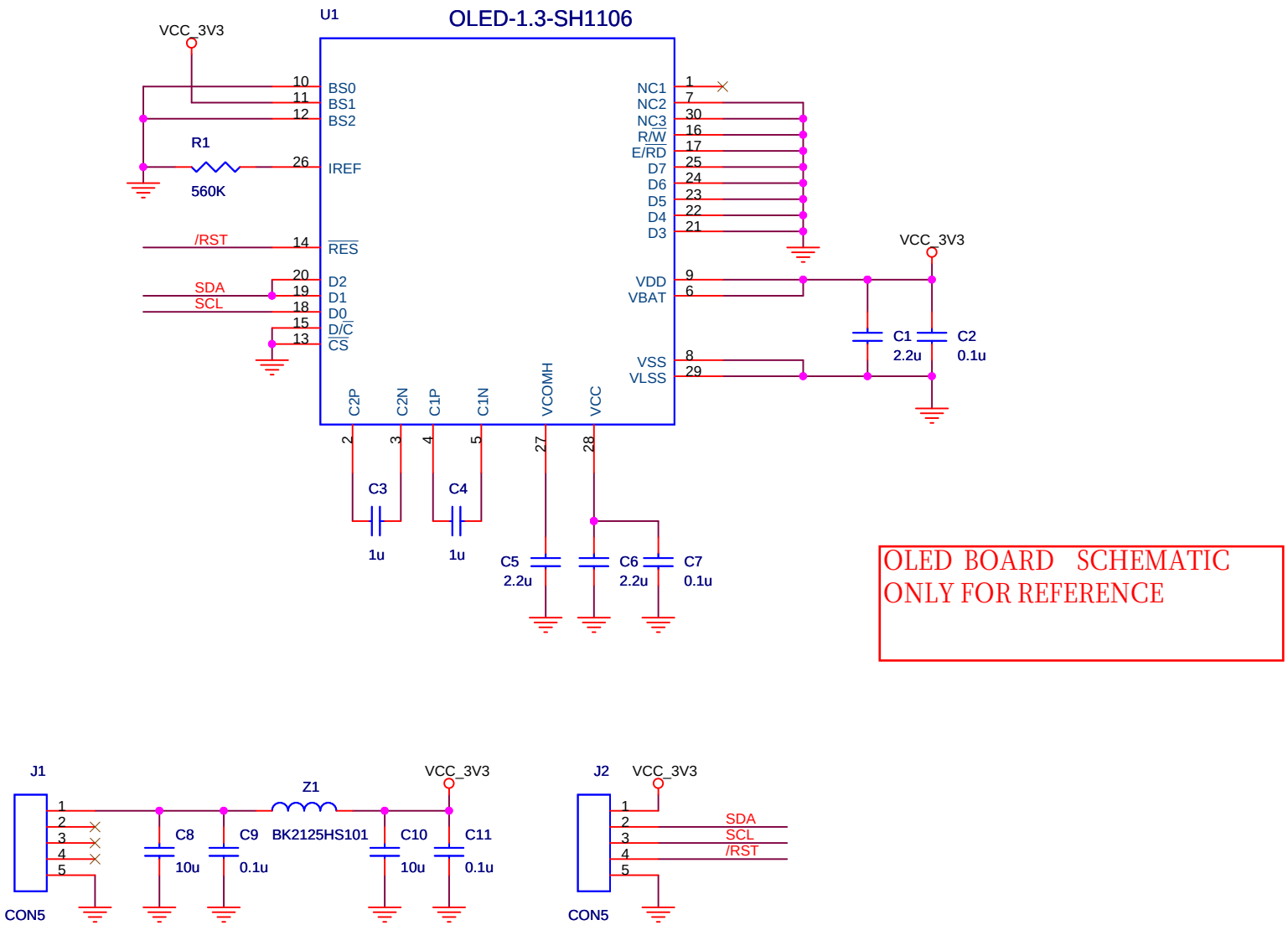

Title	01.MAIN	
Size A4	Document Number HM00OBKA_3	Rev 3.0
Date: Saturday, January 31, 2026	Sheet 1 of 1	

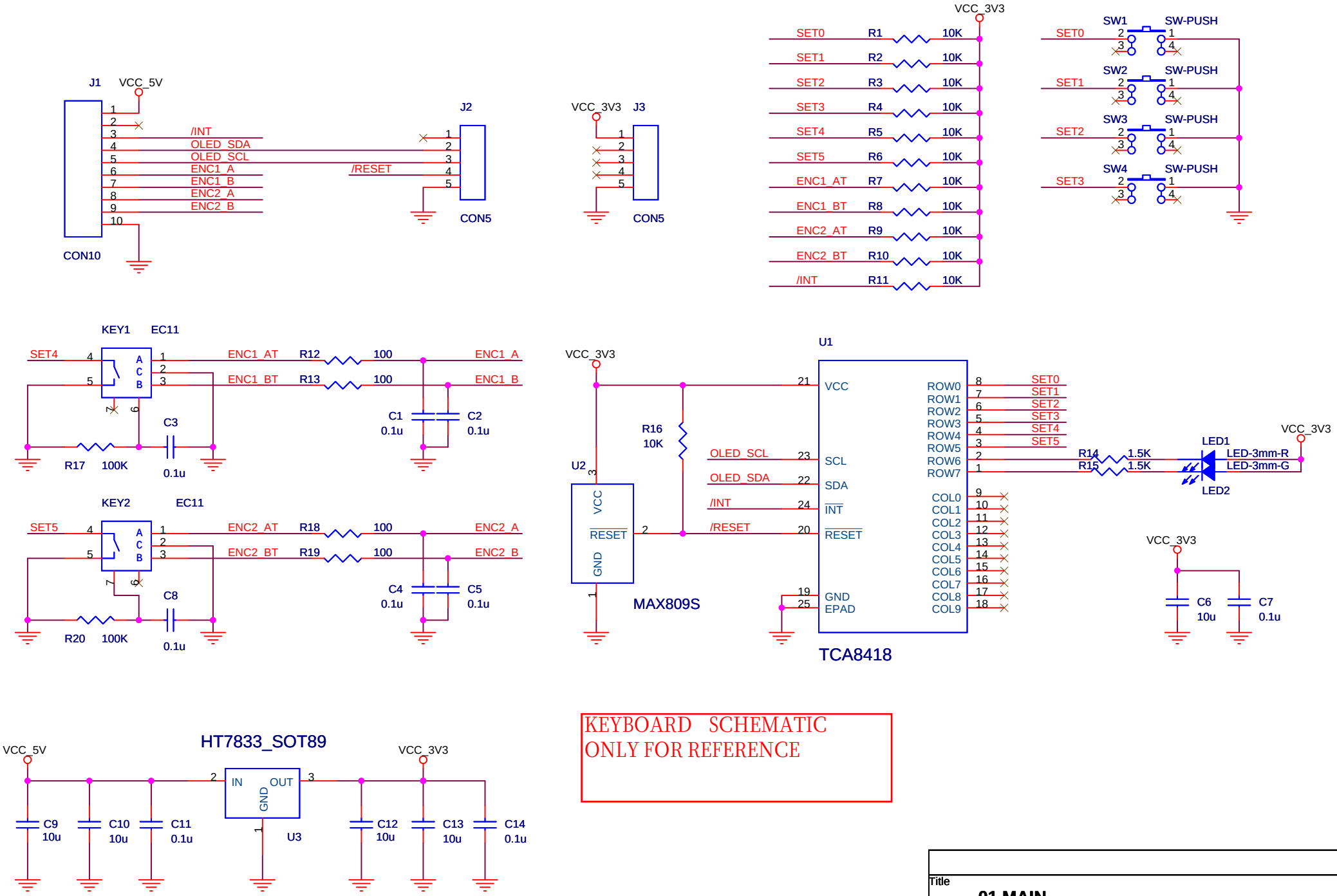

Title	01.MAIN	
Size A4	Document Number HM00KEYA_2	Rev 2.0
Date: Saturday, January 31, 2026	Sheet 1 of 1	

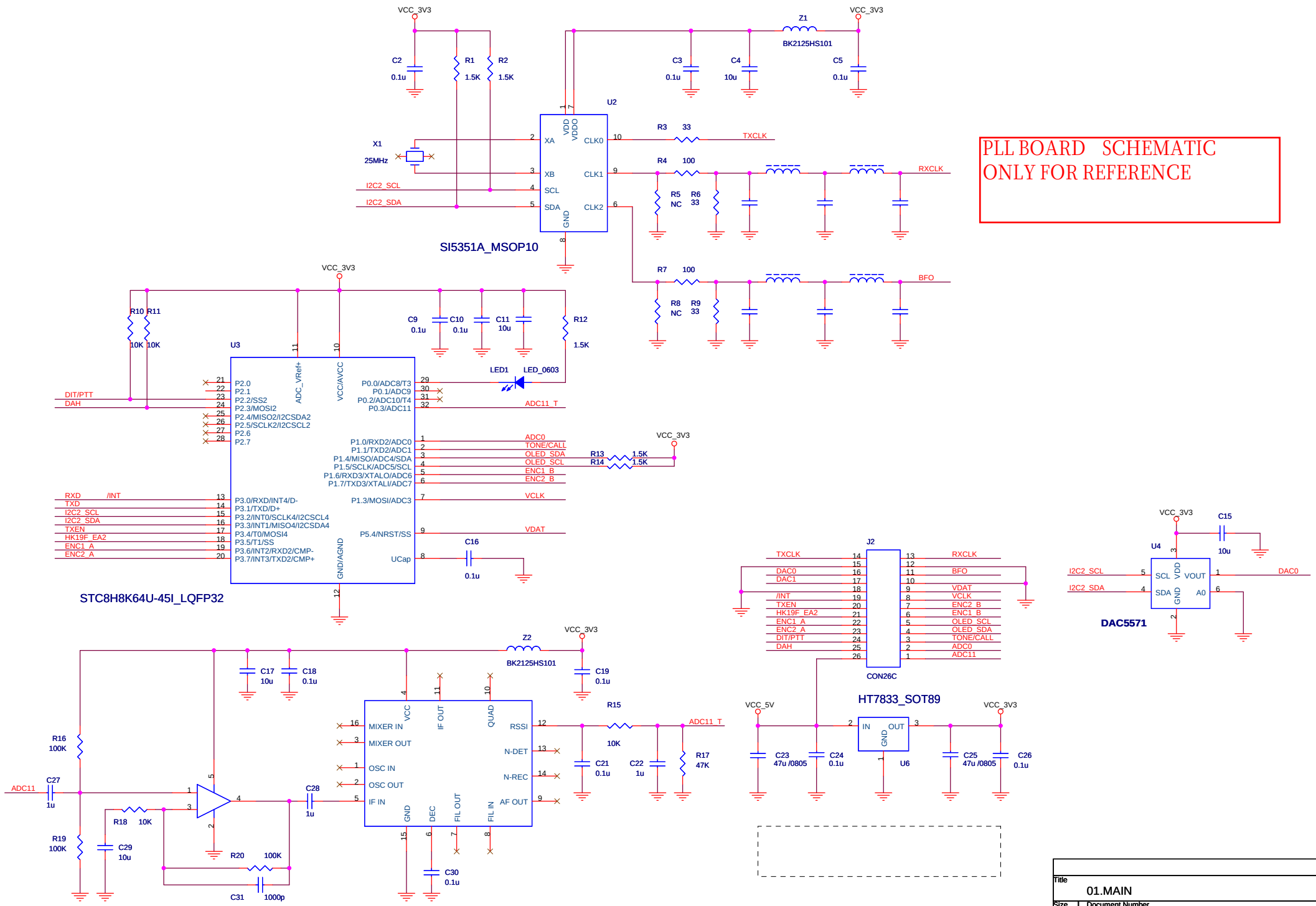
PLL BOARD SCHEMATIC
ONLY FOR REFERENCE
SI5351A_MSOP10
STC8H8K64U-45I_LQFP32
HT7833_SOT89
DAC5571
CON26C
BK2125HS101
VCC_3V3
VCC_5V
TXCLK
RXCLK
BFO
ADC11_T
ADC0
TONE/CALL
OLED_SDA
OLED_SCL
ENC1_B
ENC2_B
VCLK
VDAT
DAC0
ADC11
I2C2_SCL
I2C2_SDA
DIT/PTT
DAH
RXD
TXD
/INT
TXEN
HK19F_EA2
ENC1_A
ENC2_A
Title
01.MAIN
Size
A3
Document Number
HM00PLLD_3
Rev
3.0
Date:
Friday, December 05, 2025
Sheet
1
of
1

R60调频广播、航空波段接收机电路图（V4.0）
淘宝店：dinuco.taobao.com
邮　箱：dinuco@163.com

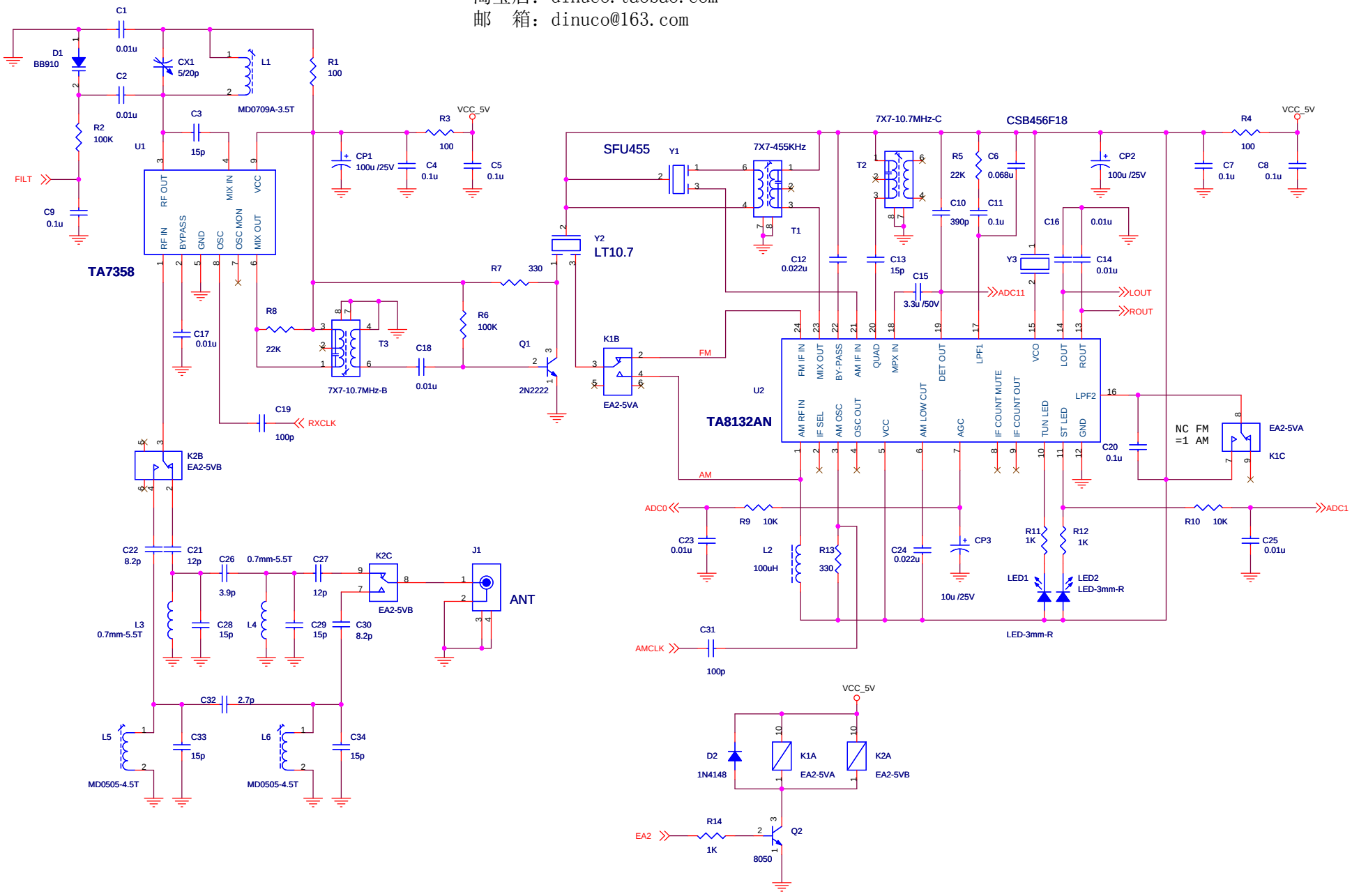

Title	01.MAIN	
Size A3	Document Number HM00ABRD_4	Rev 4.0
Date: Wednesday, March 04, 2026	Sheet 1 of 2	

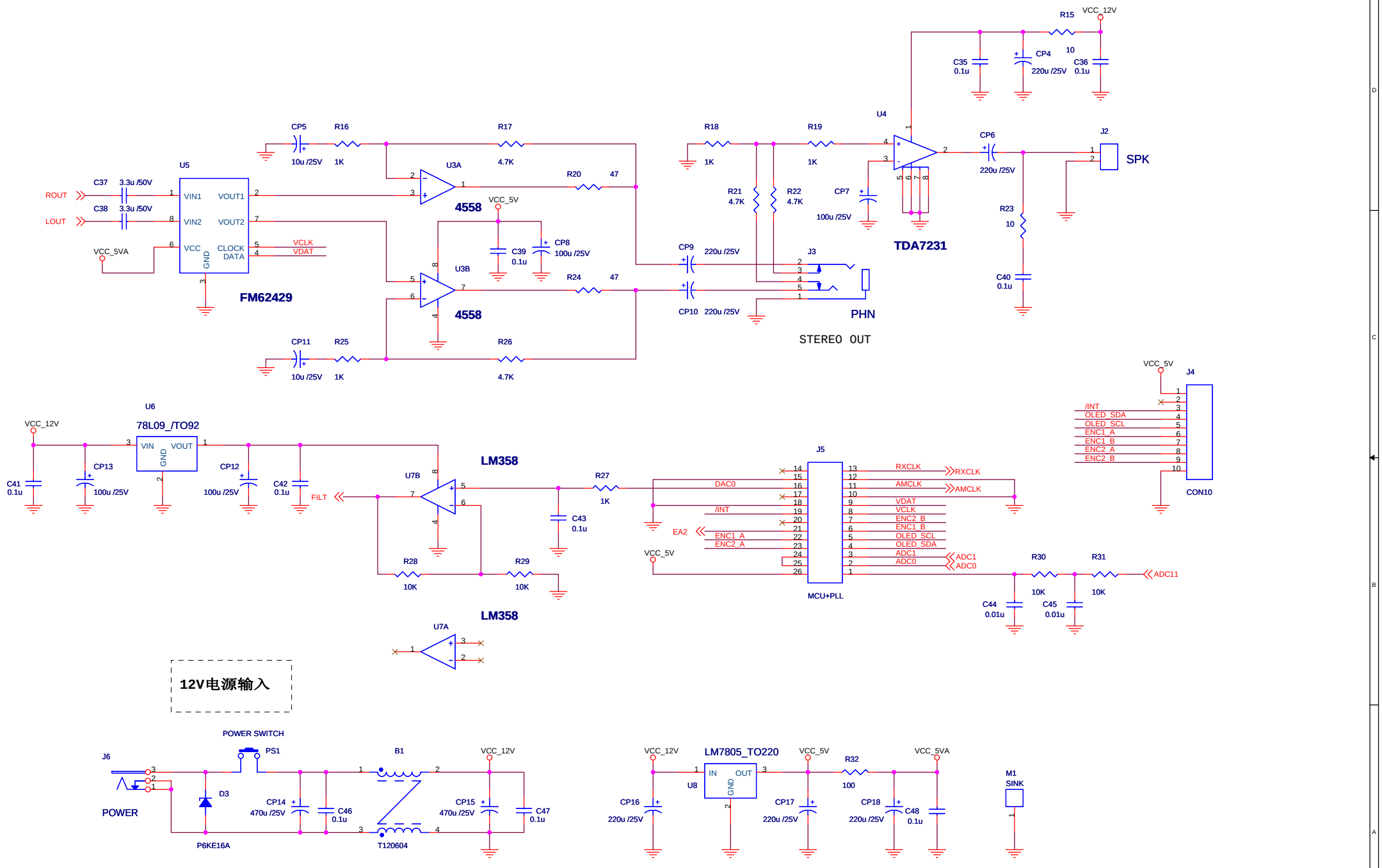

Title	02.OTHER	
Size A3	Document Number HM00ABRD_4	Rev 4.0
Date: Wednesday, March 04, 2026	Sheet 2 of 2	